Locking System for Inlet Filters
IL13

Power Cord with Locking System

energy efficiency and reliability

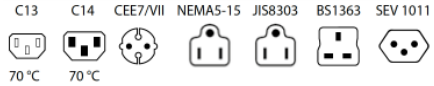

- **Locking system for standardized IEC C14 inlet**
- **No accidental disconnection**
- **Fits any Schaffner IEC C14 inlet filter**
- **Retrofit for any IEC C14 inlet**
- **Various power line plugs for international usage**
- **Standard and hospital grade plugs available**

Approvals

RoHS

Technical specifications

Cable:	EU: type H05-VV-F; US type SJT or SVT; JP: type HVCTF; black Other colors on request
Connector (line side):	IEC C14 according to IEC/EN 60320-2-2; EU Schuko plug CEE7/VII; UK plug BS1363; US NEMA5-15 plug standard or hospital grade (UL817); CH plug SEV 1011; JP plug JIS8303 Other plugs on request
Connector (load side):	IEC C13 according to IEC/EN 60320-2-2 with IEC Lock UL 498, CSA C22.2 no. 42 (for cold conditions) pin temperature 70 °C, 10 A, Protection Class I
Flammability corresponding to:	Plugs: UL94V-2 or better; Cable: IEC 60332-1 Cat. F2
High potential test voltage:	P–> PE 2000VAC (1min 50Hz)
	P –> N 2000VAC (1min 50Hz)
Maximum continuous operating voltage:	250VAC, 50/60Hz
Protection category:	IP20 according IEC 60529
Rated currents:	10A
Temperature range (operation and storage):	-25 °C to +70 °C

The locking system has a tensile force of typical 200N. It is recommended to use it with flange mount filters. For details refer to our Application Note „Using IEC Lock Power Cords with IEC Inlets and Filters"

Schaffner power cords with IEC lock guard against accidental disconnection of all electrical appliances with an IEC inlet. No exchange or modification of the IEC inlet or
IEC inlet filter system is needed. Easy retrofit for all electronic equipments and devices.

Features and benefits

- Power cord with locking system for IEC inlets
- Protection class I
- Suitable for use with any C14 IEC inlet
- Fits the complete Schaffner IEC inlet filter program with C14 IEC inlet
- Max. pin temperature 70°C

Typical applications

- Data centers
- Industrial equipment
- Medical devices
- In-vitro diagnostic devices
- Broadcasting stations
- Mobile applications

Cable selection table

IL13-C14-H05-3100-200	IEC cable assembly with locking system for IEC C14 inlet, EU version
IL13-C14-SVT-3100-183	IEC cable assembly with locking system for IEC C14 inlet, US version
IL13-EU1-H05-3100-200	IEC cable assembly with locking system for IEC C14 inlet, EU version
IL13-US1-SVT-3100-183	IEC cable assembly with locking system for IEC C14 inlet, US version
IL13-US2-SJT-3100-...*	IEC cable assembly with locking system for IEC C14 inlet, US version, hospital grade
IL13-UK1-H05-3100-200	IEC cable assembly with locking system for IEC C14 inlet, UK version
IL13-CH1-H05-3100-200	IEC cable assembly with locking system for IEC C14 inlet, CH version
IL13-JP1-HVCTF-3125-200	IEC cable assembly with locking system for IEC C14 inlet, JP version
IL13-SE-H05-3100-200	IEC cable assembly with locking system for IEC C14 inlet, stripped ends

* To compile a complete part number, please replace the -... with the required lenght. This power cord is with 6ft. (-183) 9ft. (-275) and 12ft. (-366) deliverable.

Product selector

IL13-yyy-zzz-aaaa-bbb

183	cable length 183 cm (6ft), (only US versions)
200	cable length 200 cm (6ft 7in)
3100	3 x 1.0 mm² (US: AWG18)
3125	3 x 1.25 mm² (only Japan version)
H05	cable type H05VV-F
SVT	cable type SVT
SJT	cable type SJT
HVCTF	cable type HVCTF
C14	line side plug IEC C14 male, straight
EU1	line side plug CEE7/VII, right angled
US1	line side plug NEMA5-15, straight
US2	line side plug NEMA5-15, straight, hospital grade according UL817
UK1	line side plug BS1363, right angled, fused 5A
CH1	line side plug SEV1011, straight
JP1	line side plug JIS8303, straight
SE	line side with stripped ends
IL13	load side IEC C13 female plug, straight, lock

Mechanical data

C13

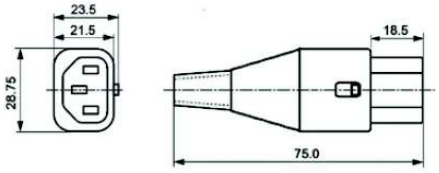

C14

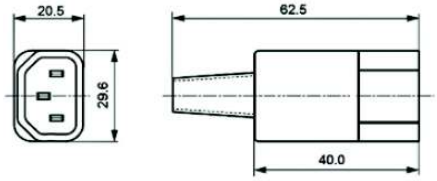

NEMA5-15

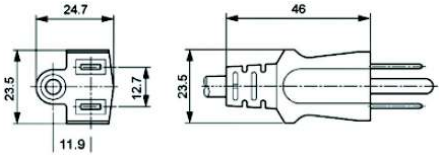

JIS 8303

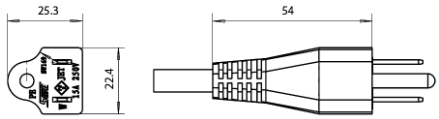

SEV1011

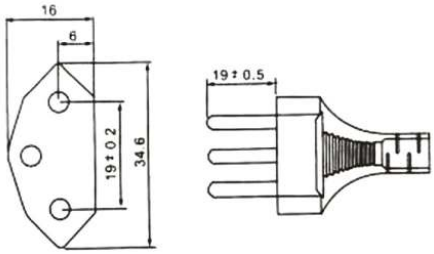

BS1363

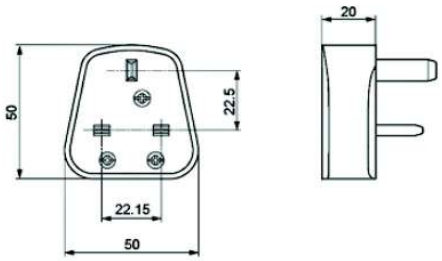

NEMA5-15 (Hospital grade)

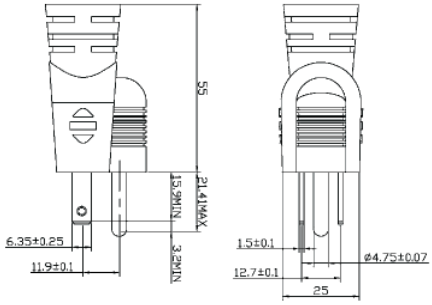

CEE7/VII

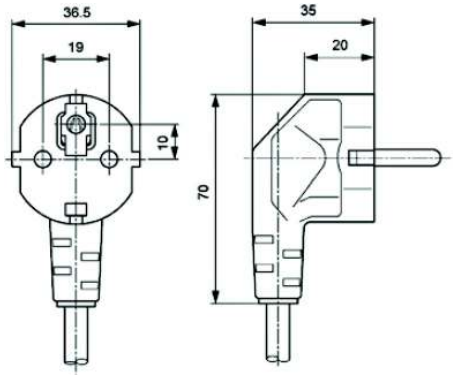

Headquarters, global innovation and development center

Schaffner Group
Nordstrasse 11
4542 Luterbach
Switzerland
T +41 32 681 66 26
F +41 32 681 66 30
info@schaffner.com
www.schaffner.com

To find your local partner within Schaffner's global network, please go to:
www.schaffner.com

© 2014 Schaffner Group
The content of this document has been carefully checked and understood. However, neither Schaffner nor its subsidiaries assume any liability whatsoever for any errors or inaccuracies of this document and the consequences thereof. Published specifications are subject to change without notice. Product suitability for any area of application must ultimately be determined by the customer. In all cases, products must never be operated outside their published specifications. Schaffner does not guarantee the availability of all published products. This disclaimer shall be governed by substantive Swiss law and resulting disputes shall be settled by the courts at the place of business of Schaffner Holding AG. Latest publications and a complete disclaimer can be downloaded from the Schaffner website. All trademarks recognized.

01/2014 EN

Sales and application centers

China
Schaffner EMC Ltd. Shanghai
T20-3, No 565 Chuangye Road
Pudong New Area
201201 Shanghai
T +86 21 3813 9500
F F +86 21 3813 9501 / 02
cschina@schaffner.com
http://www.schaffner.com.cn/

Finland
Schaffner Oy
Sauvonrinne 19 H
08500 Lohja
T +358 19 35 72 71
finlandsales@schaffner.com

France
Schaffner EMC S.A.S.
112, Quai de Bezons
Boîte postale 133
95103 Argenteuil
T +33 1 34 34 30 60
F +33 1 39 47 02 28
francesales@schaffner.com

Italy
Schaffner EMC S.r.l.
Via Galileo Galilei 47
20092 Cinisello Balsamo (MI)
T +39 02 66 04 30 45/47
F +39 02 61 23 943
italysales@schaffner.com Â

Japan
Schaffner EMC K.K.
1-32-12, Kamiuma, Setagaya-ku
7F Mitsui-seimei Sangenjaya Bldg.
154-0011 Tokyo
T +81 3 5712 3650
F +81 3 5712 3651
japansales@schaffner.com
http://www.schaffner.jp

Singapore
Schaffner EMC Pte Ltd.
Blk 3015A Ubi Road 1
05-09 Kampong Ubi Industrial Estate
408705 Singapore
T +65 6377 3283
F +65 6377 3281
singaporesales@schaffner.com

Germany
Schaffner Deutschland GmbH
Schoemperlenstrasse 12B
76185 Karlsruhe
T +49 721 56910
F +49 721 569110
germanysales@schaffner.com

Spain
Schaffner EMC España
Calle Caléndula 93, Miniparc III, Edificio E
El Soto de la Moraleja Alcobendas
28109 Madrid
T +34 618 176 133
spainsales@schaffner.com

Sweden
Schaffner EMC AB
Turebergstorg 1, 6
19147 Sollentuna
T +46 8 5792 1121 / 22
F +46 8 92 96 90
swedensales@schaffner.com

Switzerland
Schaffner EMV AG
Nordstrasse 11
4542 Luterbach
T +41 32 6816 626
F +41 32 6816 641
sales@schaffner.ch

Taiwan R.O.C.
Schaffner EMV Ltd.
6 Floor, No. 413
Rui Guang Road
114 Neihu District Taipei City
T +886 2 87525050
F +886 2 87518086
taiwansales@schaffner.com

Thailand
Schaffner EMC Co. Ltd.
Northern Region Industrial Estate
67 Moo 4 Tambon Ban Klang Amphur
Muangg P.O. Box 14
51000 Lamphun
T +66 53 58 11 04
F +66 53 58 10 19
thailandsales@schaffner.com

UK
Schaffner Ltd.
5 Ashville Way
Molly Millars Lane Wokingham
RG41 2PL Berkshire
T +44 118 9770070
F +44 118 9792969
uksales@schaffner.com
http://www.schaffner.uk.com

USA
Schaffner EMC Inc.
52 Mayfield Avenue
08837 Edison
T 1-800-367-5566
T 732-225-9533
F 732-225-4789
usasales@schaffner.com
http://www.schaffner.com/us