schaffner
energy efficiency and reliability

Compact EMC/RFI Filter for Industrial Motor Drive Applications

- Very compact and light weight design requiring minimum space
- Easy, time-saving installation and contacting
- Protective covers as optional accessory available
- Attenuation performance according to EN 61800-3/A11

Performance indicators

Attenuation performance

Rated current [A]

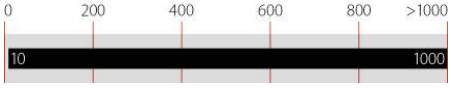

Technical specifications

Design corresponding to	UL 1283, CSA 22.2 No. 8 1986, IEC/EN 60939
Flammability corresponding to	UL 94 V-2 or better
High potential test voltage	P –> E 2750 VDC for 2 sec P –> P 2250 VDC for 2 sec
Maximum continuous operating voltage	3x 520/300 VAC (480 VAC +10% possible)
MTBF @ 50°C/400V (Mil-HB-217F)	>320,000 hours
Operating frequency	dc to 60 Hz
Overload capability	4x rated current at switch on, 1.5x rated current for 1 minute, once per hour
Protection category	IP20 (10 to 100 A) IP00 (150 to 1000 A)
Rated currents	10 to 1000 A @ 50 °C
Temperature range (operation and storage)	-25 °C to +100 °C (25/100/21)

Approvals

RoHS

Features and benefits

- An extremely compact and light weight filter design requiring minimum mounting space in installations and cabinets
- Simple and time-saving installation with good accessibility for automatic and hand tools
- Solid, touch-safe terminal blocks, for all filters from 10 to 100 A, offering sufficient contacting cross section according to the EN 60204-1 installation standard
- Optionally available transparent protective covers for all filters with busbars from 150 to 1000 A, to protect the installer, operator or inspector from undeliberate touching of life conductors. They can easily be retrofitted even if the filter is already installed and connected
- These EMC filters provide the attenuation performance needed to fulfill EN 61800-3/A11
- Guaranteed filter performance under fullload operating conditions
- 15 different filter models allow the specific choice and deployment for most industrial applications

Typical applications

- Variable speed electrical power drive systems/motor drives for mainly industrial purpose
- Various industrial applications comprising frequency inverters, motor drives and servo drives

Typical electrical schematic

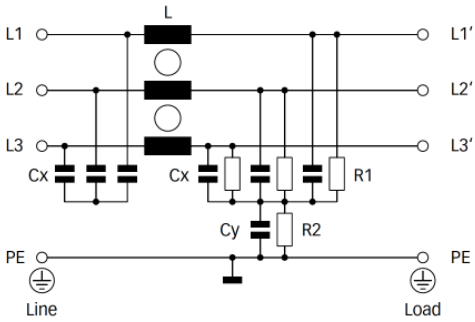

Filter selection table

Filter	Rated current @ 50 °C (40 °C) [A]	Typical drive power rating* [kW]	Leakage current** @ 480 VAC/50 Hz [mA]	Power loss @ 25 °C/50 Hz [W]	Input/Output connections		Weight [kg]	Protective covers*** Order code
FN 3270H-10-44	10 (11)	5.5	26.4	2.4	–44		0.4	
FN 3270H-20-44	20 (22)	11	26.4	4.1	–44		0.5	
FN 3270H-35-33	35 (38)	22	29.4	6.8	–33		0.7	
FN 3270H-50-34	50 (55)	30	29.4	12.8	–34		1.2	
FN 3270H-65-34	65 (71)	37	29.4	13.5	–34		1.3	
FN 3270H-80-35	80 (88)	45	29.4	13.5	–35		2.2	
FN 3270H-100-35	100 (110)	55	29.4	17.1	–35		2.6	
FN 3270H-150-99	150 (164)	75	59.5	7.5		–99	6.1	801916
FN 3270H-200-99	200 (219)	110	59.5	13.2		–99	6.1	801916
FN 3270H-250-99	250 (274)	132	59.5	20.6		–99	6.1	801916
FN 3270H-320-99	320 (350)	160	59.5	12.2		–99	7.2	801916
FN 3270H-400-99	400 (438)	220	59.5	19.2		–99	7.2	801916
FN 3270H-600-99	600 (657)	315	59.5	35.6		–99	7.7	801916
FN 3270H-800-99	800 (876)	400	59.5	51.8		–99	15.8	806275
FN 3270H-1000-99	1000 (1095)	560	59.5	81.0		–99	15.8	806275

* Calculated at rated current, 480 VAC and cos phi = 0.8. The exact value depends upon the efficiency of the drive, the motor and the entire application.
** Maximum leakage under normal operating conditions. Note: if two phases are interrupted, worst case leakage could reach 5.2 times higher levels.
*** Please contact your local Schaffner partner to order the optional protective covers with the order code in the table above.

Typical filter attenuation

Per CISPR 17; A = 50 Ω/50 Ω sym; B = 50 Ω/50 Ω asym; C = 0.1 Ω/100 Ω sym; D = 100 Ω/0.1 Ω sym

10 and 20 A types

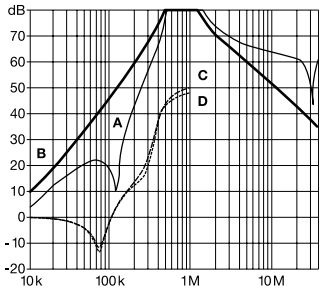

35 to 65 A types

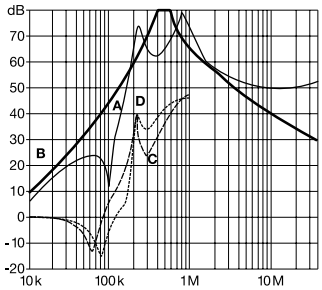

80 and 100 A types

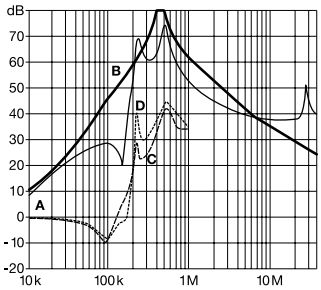

150 to 1000 A types

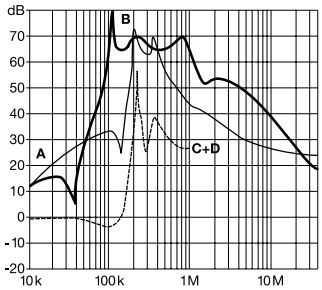

Mechanical data

10 to 100 A types

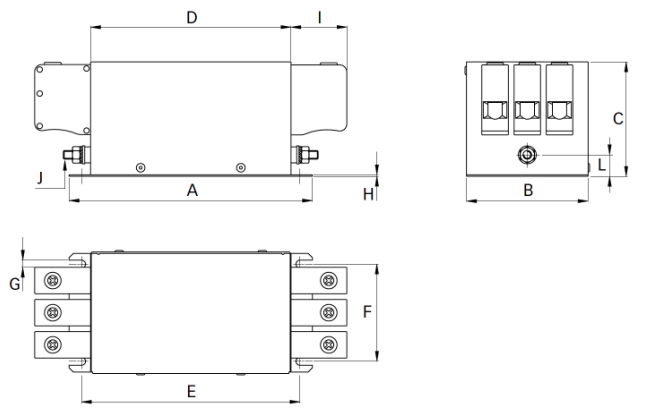

150 to 1000 A types

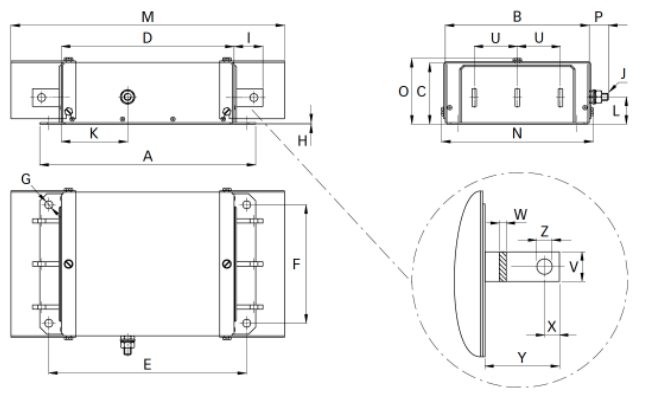

Dimensions

	10 A	20 A	35 A	50 A	65 A	80 A	100 A	150 A	200 A	250 A	320 A	400 A	600 A	800 A	1000 A
A	150	150	160	170	170	200	230	300	300	300	300	300	300	370	370
B	58	58	70	85	85	95	95	200	200	200	200	200	200	190	190
C	58	58	68	80	80	90	90	86	86	86	86	86	86	125	125
D	120	120	130	140	140	170	200	240	240	240	240	240	240	310	310
E	132.5	132.5	142.5	152.5	152.5	182.5	212.5	275	275	275	275	275	275	345	345
F	42	42	50	65	65	75	75	165	165	165	165	165	165	155	155
G	4.5	4.5	5.5	5.5	5.5	5.5	5.5	Ø 11	Ø 11	Ø 11	Ø 11	Ø 11	Ø 11	Ø 11	Ø 11
H	1	1	1	1	1	1.5	1.5	2	2	2	2	2	2	3	3
I	10.9	10.9	25	39	39	45	45	40	40	40	40	40	40	50	50
J	M4	M4	M5	M6	M6	M8	M8	M10	M10	M10	M10	M10	M10	M12	M12
K								92	92	92	92	92	92	138	138
L	20.5	20.5	20	15	15	16	16	37	37	37	37	37	37	67	67
M								380	380	380	380	380	380	610	610
N								211	211	211	211	211	211	201	201
O								93	93	93	93	93	93	132	132
P								26.5	26.5	26.5	26.5	26.5	26.5	29	29
U								60	60	60	60	60	60	60	60
V								20	20	20	25	25	25	40	40
W								3	3	3	6	6	8	8	8
X								10	10	10	12.5	12.5	12.5	20	20
Y								37	37	37	37	37	37	47	47
Z								Ø 9	Ø 9	Ø 9	Ø 11	Ø 11	Ø 11	Ø 13.5	Ø 13.5

All dimensions in mm; 1 inch = 25.4 mm Tolerances according: ISO 2768-m / EN 22768-m

Filter input/output connector cross sections

	-33	-34	-35	-44
Solid wire	16 mm^2	35 mm^2	50 mm^2	10 mm^2
Flex wire	10 mm^2	25 mm^2	50 mm^2	6 mm^2
AWG type wire	AWG 6	AWG 2	AWG 1/0	AWG 8
Recommended torque	1.5-1.8 Nm	4.0-4.5 Nm	7-8 Nm	1.5-1.8 Nm

Please visit www.schaffner.com to find more details on filter connectors.